Ammonia Gas Sensor

Product Data Sheet
Model #SS21N8

2019. Ver 1.0

Applications

- Ideal for portable instrument
- Industry safety (ambient air monitoring applications)
- Refrigeration facilities (ice cream plants, food processing)
- Pharmaceuticals and cosmetics
- Etc.

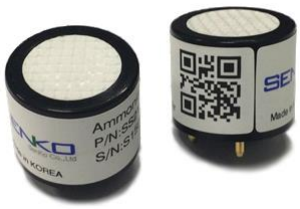

Specifications

Performance Characteristics	
Output Signal	100±30 nA / ppm
Typical Baseline Range (pure air)	±2 ppm NH_3 equivalent
T90 Response Time	<30 seconds
Measurement Range	0-100 ppm
Maximum Overload	200 ppm
Linearity	Linear
Repeatability	<±10%
Recommended Load Resistor	10 ohms
Resolution (Electronics Dependent)	< 1 ppm typical
Environmental	
Temperature Range Continuous	-20℃ to +50℃
Pressure Range	800 to 1200 mbar
Operating Humidity Range	15% to 90% Rh
Life Time	
Long Term Output Drift	<10% per annum
Recommended Storage Temp	0℃ to 20℃
Expected Operating Life	>24 months in air
Standard Warranty	24 months from data od dispatch
Intrinsic Safety Data	
Maximum at 200ppm	40mA
Maximum o/c Voltage	<1.0V
Maximum s/c Current	<0.1A

Dimension

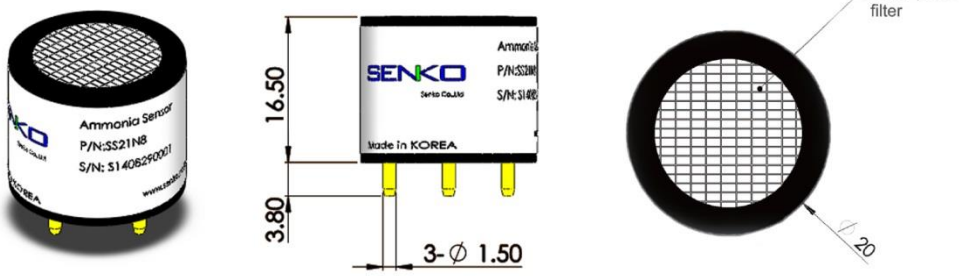

Due to ongoing research and product improvement, specifications are subject to change without notice

SENKO.CO.Ltd, 73, Oesammi-ro 15beon-gil, Osan-si, Gyeonggi-do, 18111, South Korea
Telephone:+82-31-492-0445 Fax:+82-31-492-0446 E-mail:sales@senko.co.kr Website:www.senko.co.kr

Ammonia Gas Sensor

Product Data Sheet
Model #SS21N8

2019. Ver 1.0

Temperature effects

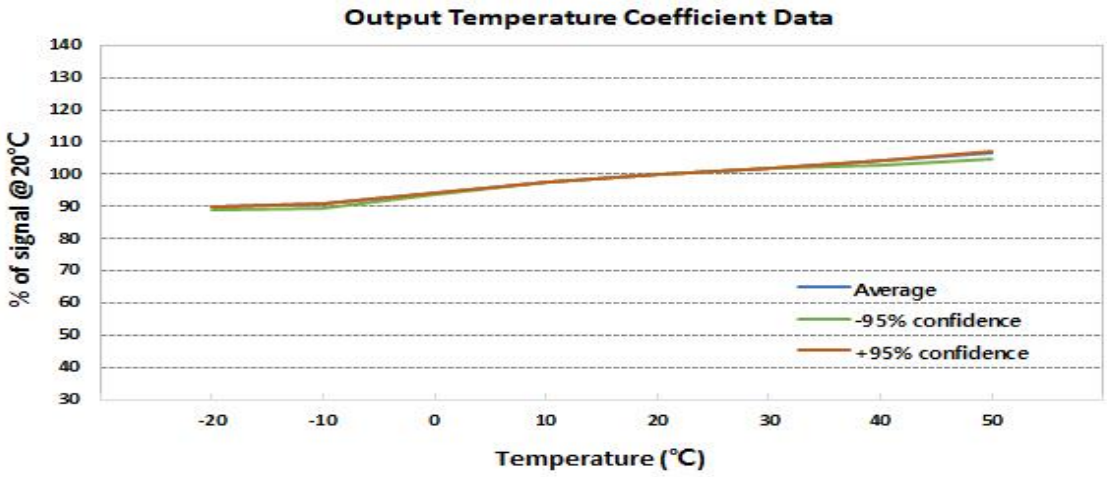

Cross sensitivity

Gas	Concentration [ppm]	Reading [ppm]
Ammonia	100	100
Hydrogen Sulfide	100	<10
Carbon Dioxide	5,000	0
Carbon Monoxide	100	0
Hydrogen	50	<25
Nitrogen Dioxide	50	<40
Nitric Oxide	200	0

Standard operating circuit

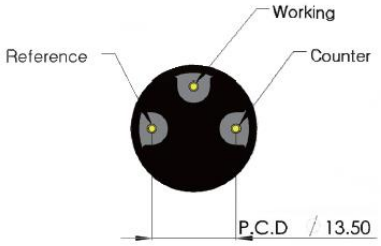

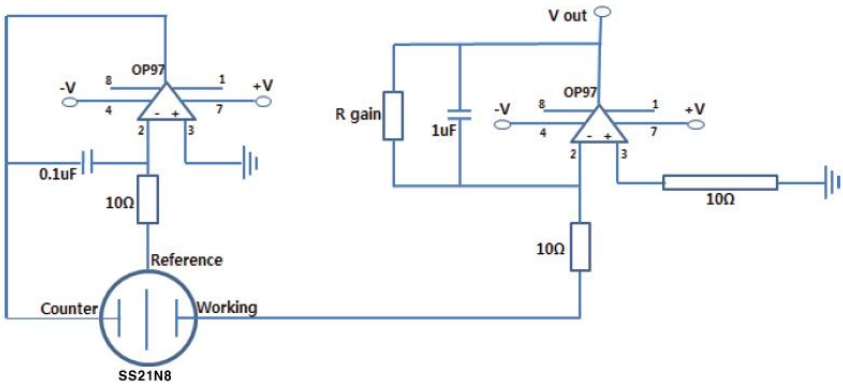

Due to ongoing research and product improvement, specifications are subject to change without notice

SENKO.CO.Ltd, 73, Oesammi-ro 15beon-gil, Osan-si, Gyeonggi-do, 18111, South Korea
Telephone:+82-31-492-0445 Fax:+82-31-492-0446 E-mail:sales@senko.co.kr Website:www.senko.co.kr